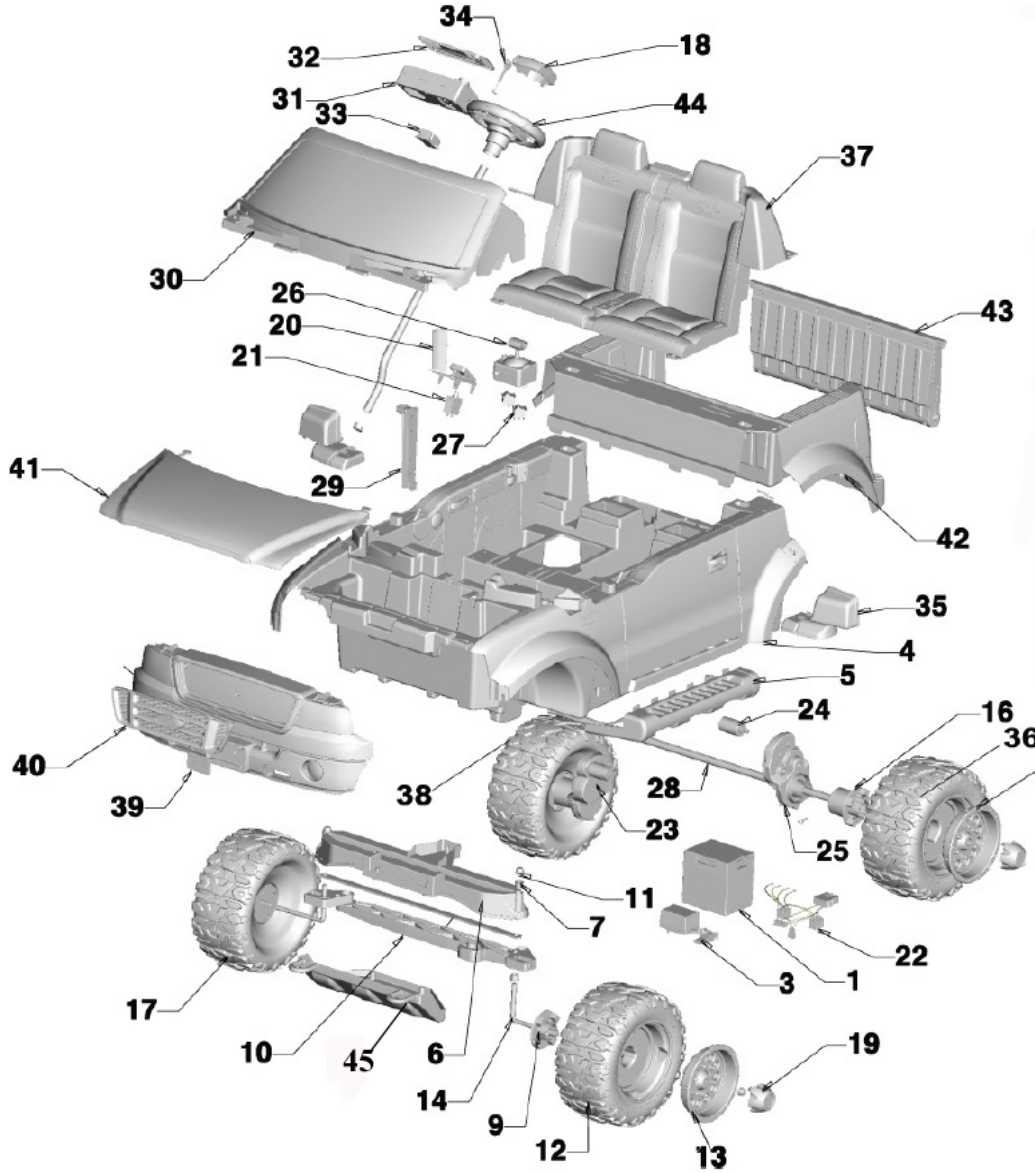

K8285
Ford F-150
PW Advanced

Age Range:	3+
Weight Limit:	130 lbs
Surfaces:	Hard surfaces, grass, gravel
Speed:	2.5 and 5 mph forward, 2.5 mph reverse
Colors:	Green exterior, tan interior
Intro:	2007
Suggested Retail:	$299.99
Box Dimensions:	35.875" x 29.875" x 51.500" 89.5 lbs
Warranty:	One Year Vehicle
	Six Months Battery

POWER WHEELS by Fisher-Price®

Item	Part #	Description	QTY	Item	Part #	Description	QTY
1	00801-1460	BATTERY, 12 VOLT	1	32	K8285-2779	RADIO FACE/BATTERY DOOR	1
3	00801-1480	CHARGER 12V PROBE	1	33	J4394-9059	BATT LIFE INDICATOR ASSY	1
4	N/A	BODY	1	34	C3493-9049	KEY HOUSING ASSEMBLY	1
5	K8285-2729	STEP BAR	2	35	3800-8490	MIRRORS (LEFT AND RIGHT)	1
6	K8285-2159	FRONT MODULE	1	36	3800-8445	LEFT REAR WHEEL	1
7	K8285-2169	BUSHING	4	37	3800-8516	SEAT ASSEMBLY	1
9	K8285-2429	DRIVER/FRONT INNER RIM	2	38	3800-8446	RIGHT REAR WHEEL	1
10	K8285-9159	STEERING LINKAGE ASSM W/CROSSBAR	1	39	00801-1518	LARGE PW-EMBLEM	1
11	0801-0226	.437 RETAINER - PALNUT	4	40	K8285-9909	BUMPER W/GRILL & LIGHTS	1
12	K8285-2239	FRONT WHEEL, LEFT	1	41	K8285-9659	HOOD ASSEMBLY	1
13	K8285-2249	RIM, FRONT OUTER	2	42	N/A	TRUCK BED ASSEMBLY	1
14	K8285-4509	FRONT AXLE	2	43	K8285-2029	TAILGATE ASSEMBLY	1
15	K8285-2179	RIM, REAR OUTER	2	44	K8285-9069	STEERING WHEEL ASSEMBLY	1
16	K8285-2279	DRIVER/REAR INNER RIM	2	45	K8285-2049	GRILL SUPPORT	1
17	K8285-2039	FRONT WHEEL, RIGHT	1				
18	K8285-2199	STEERING WHEEL CAP	1			2/21/2008 17:57	
19	K8285-2189	HUBCAP, CENTER	4			**Parts Not Shown**	
20	K8285-9309	FOOTBOARD ASSEMBLY	1		3800-8545	RIGHT TAILLIGHT	2
21	**00801-1566**	**FOOTSWITCH, PLUNGER**	**1**		3800-8546	LEFT TAILLIGHT	2
22	**K8285-9799**	**F-150 HARNESS - TYPE 12V**	**1**		N/A	SCREW 1/4 X 1 1/2	5
23	**00968-2930**	**MOTOR GEARBOX ASSM**	**2**		0912-8001	SCREW #8 x 3/4"	10
24	**00968-2701**	**MOTOR ASSM**	**2**		K8285-9269	HARDWARE BAG	1
25	**00968-2818**	**GEARBOX**	**2**		K8285-9259	PARTS BAG	1
26	K8285-9319	SHIFTER ASSEMBLY	1		K8285-4009	STEERING COLUMN	1
27	**00801-0923**	**SWITCH CONTROL (rocker)**	**1**		K8285-2509	DOOR HANDLE	2
28	3800-8410	REAR AXLE	1		K8285-0920	OWNER'S MANUAL	1
29	K8285-2799	CHANNEL COVER	1		K8285-0310	LABEL SHEET	1
30	K8285-9749	WINDSHIELD/DASH/RADIO ASSEMBLY	1		00801-0712	COTTER PIN	2
31	**K8285-9609**	**RADIO ASSEMBLY**	**1**		K8285-5599	SEAT BELT SET (3 PC)	1

Bold and underlined parts are to be purchased and installed by Service Centers only. These items may not be sold directly to consumers by Service Centers or Fisher-Price.

Please see Service Bulletin 184 for rear wheel assembly/axle details.